10 Wiring Diagrams

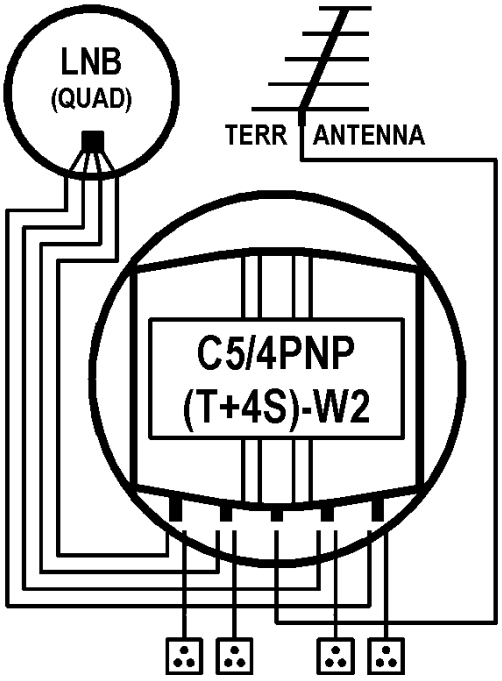

11 Contact

EMP-Centauri s.r.o.
5. kvetna 690
339 01 Klatovy 4
Czech Republic

tel: (+420) 376 314 852
fax: (+420) 376 314 367
info@emp-centauri.cz
www.emp-centauri.eu

C5/4PNP(T+4S)-W2

Dear Customer, congratulations on the purchase of the EMP-Centauri product. Before its installation and putting into operation, read carefully the entire operation manual. Keep the purchase and rework (if any) records for future need.

1 Field of Application, Warranty

The product is designed for the distribution of satellite (SAT) and terrestrial (TERR), TV and radio signals. **We recommend the device to be installed and serviced by the qualified technician.** EMP-Centauri's PROFI CLASS products are covered under 4 (four) years warranty from the date of purchase. The warranty shall not apply to the product used for other than the specified purpose. The user will be responsible for injury or material damage which may arise in consequence of any product use in contradiction with the manual. Repairs or any interventions in the product may be performed only by EMP-Centauri company, or other companies authorized by EMP-Centauri.

2 Technical Specifications

The product is a combiner in the weatherproof housing for combining of terrestrial signals to satellite signals from quad convertor for 4 users. Satellite inputs transmit DC voltage, 22 kHz and DiSEqC commands, terrestrial input is DC blocked.

Specifications	C5/4PNP(T+4S)-W2
Number of Inputs / Outputs	5/4
Frequency Range	TERR 5-862 MHz, SAT 950-2300 MHz
Insertion Loss (avg)	TERR 9 dB, SAT 2 dB
Isolation (min)	SAT 30 dB (between trunks) TERR – SAT 20 dB min SAT – TERR 10 dB min (suppression of convertor interference 25 dB min)
Dimensions (w,d,h)	11.2 x 11.2 x 4.9 cm
Temperature Range	-30°C - +70°C

10 Wiring Diagrams

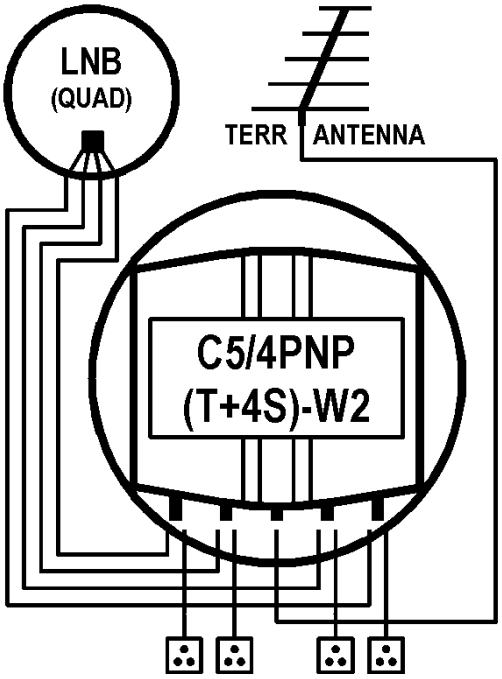

11 Contact

EMP-Centauri s.r.o.
5. května 690
339 01 Klatovy 4
Czech Republic

tel: (+420) 376 314 852
fax: (+420) 376 314 367
info@emp-centauri.cz
www.emp-centauri.eu

4 of 4

Instruction Manual 1/003043 A EMP-CENTAURI

C5/4PNP(T+4S)-W2

Dear Customer, congratulations on the purchase of the EMP-Centauri product. Before its installation and putting into operation, read carefully the entire operation manual. Keep the purchase and rework (if any) records for future need.

1 Field of Application, Warranty

The product is designed for the distribution of satellite (SAT) and terrestrial (TERR), TV and radio signals. **We recommend the device to be installed and serviced by the qualified technician.** EMP-Centauri's PROFI CLASS products are covered under 4 (four) years warranty from the date of purchase. The warranty shall not apply to the product used for other than the specified purpose. The user will be responsible for injury or material damage which may arise in consequence of any product use in contradiction with the manual. Repairs or any interventions in the product may be performed only by EMP-Centauri company, or other companies authorized by EMP-Centauri.

2 Technical Specifications

The product is a combiner in the weatherproof housing for combining of terrestrial signals to satellite signals from quad convertor for 4 users. Satellite inputs transmit DC voltage, 22 kHz and DiSEqC commands, terrestrial input is DC blocked.

Specifications	C5/4PNP(T+4S)-W2
Number of Inputs / Outputs	5/4
Frequency Range	TERR 5-862 MHz, SAT 950-2300 MHz
Insertion Loss (avg)	TERR 9 dB, SAT 2 dB
Isolation (min)	SAT 30 dB (between trunks) TERR – SAT 20 dB min SAT – TERR 10 dB min (suppression of convertor interference 25 dB min)
Dimensions (w,d,h)	11.2 x 11.2 x 4.9 cm
Temperature Range	-30°C - +70°C

1 of 4

avg - average value, there is ±3 dB tolerance in specified range
min - minimum value

3 Product Takeover

Make sure that the product is not damaged. Please contact your dealer in the case of damage.

4 Product Storing and Installation

The product must not be stored and installed in the place with excessive dust pollution, mechanical vibrations or impacts in the place out of temperature limits specified in the section 2 Technical Specifications close to heat sources (radiators or air ventilators, etc.) and in the reach of children. Fix the product firmly on a wall or another hard and inflammable surface with screws and dowels or fix it to the antenna mast with folding strip, the direction of F sockets is always downward. The product shall be in no case held only by the connected cables. Do not place any containers with liquids (vases, glasses etc.) or naked flame sources (lighted candle etc.) on the product or near the product.

5 Product Connection

Connect the product in accordance with this manual and valid regulation. Use high-quality 75 Ω coaxial cable designed for satellite reception. Mount the F connectors (screw, crimp or compress type) on the ends of coaxial cables. Connect the F connectors into the F sockets of product and fasten them with an appropriate force. The coaxial cables shall not be broken, the minimum bending radius should be 5 cm. Connect input F sockets marked SAT IN 1-4 with quad or monoblock quad convertors (LNBs) outputs. Connect input F socket marked TERR IN with output of terrestrial antenna. Connect output F sockets marked OUT 1-4 with other components in distribution system (satellite receiver, terrestrial receiver, wall socket etc.). The wiring examples are shown in the section 10 Wiring Diagrams or at www.emp-centauri.eu.

6 Product Settings

There are no special settings for product C5/4PNP(T+4S)-W2.

7 Safety

Due to security reasons the product and wiring in which the product is connected, must be grounded properly. Make sure the antennas are grounded properly. Connect all devices to power grid only after all connections are finished and checked. Never work on the wiring (including terrestrial and satellite receivers, TVs) during or before a storm. A lightning stroke into the antenna may cause dangerous overvoltage in the product metallic parts.

8 Product Maintenance

Always disconnect the product from the wiring before performing any maintenance of the product. If you have to enter places with a risk of fall, pay attention to your safety. Use only dry cloth to clean the product and do not use any liquid agents. Coaxial cables installed outdoors should be replaced once in a few years. Unscrew all F connectors and clean connector contacts, resp. shorten the coaxial cable by approx. 2 cm, every 2 years.

9 Symbols Explanation

CE	certificate of conformity
	According to EU directive, electric and electronic devices which are identified by one of the following symbols must not be disposed of together with municipal waste. When disposing of the old device, use local waste collection and separation systems.

avg - average value, there is ±3 dB tolerance in specified range
min - minimum value

3 Product Takeover

Make sure that the product is not damaged. Please contact your dealer in the case of damage.

4 Product Storing and Installation

The product must not be stored and installed in the place with excessive dust pollution, mechanical vibrations or impacts in the place out of temperature limits specified in the section 2 Technical Specifications close to heat sources (radiators or air ventilators, etc.) and in the reach of children. Fix the product firmly on a wall or another hard and inflammable surface with screws and dowels or fix it to the antenna mast with folding strip, the direction of F sockets is always downward. The product shall be in no case held only by the connected cables. Do not place any containers with liquids (vases, glasses etc.) or naked flame sources (lighted candle etc.) on the product or near the product.

5 Product Connection

Connect the product in accordance with this manual and valid regulation. Use high-quality 75 Ω coaxial cable designed for satellite reception. Mount the F connectors (screw, crimp or compress type) on the ends of coaxial cables. Connect the F connectors into the F sockets of product and fasten them with an appropriate force. The coaxial cables shall not be broken, the minimum bending radius should be 5 cm. Connect input F sockets marked SAT IN 1-4 with quad or monoblock quad convertors (LNBs) outputs. Connect input F socket marked TERR IN with output of terrestrial antenna. Connect output F sockets marked OUT 1-4 with other components in distribution system (satellite receiver, terrestrial receiver, wall socket etc.). The wiring examples are shown in the section 10 Wiring Diagrams or at www.emp-centauri.eu.

2 of 4

6 Product Settings

There are no special settings for product C5/4PNP(T+4S)-W2.

7 Safety

Due to security reasons the product and wiring in which the product is connected, must be grounded properly. Make sure the antennas are grounded properly. Connect all devices to power grid only after all connections are finished and checked. Never work on the wiring (including terrestrial and satellite receivers, TVs) during or before a storm. A lightning stroke into the antenna may cause dangerous overvoltage in the product metallic parts.

8 Product Maintenance

Always disconnect the product from the wiring before performing any maintenance of the product. If you have to enter places with a risk of fall, pay attention to your safety. Use only dry cloth to clean the product and do not use any liquid agents. Coaxial cables installed outdoors should be replaced once in a few years. Unscrew all F connectors and clean connector contacts, resp. shorten the coaxial cable by approx. 2 cm, every 2 years.

9 Symbols Explanation

CE	certificate of conformity
	According to EU directive, electric and electronic devices which are identified by one of the following symbols must not be disposed of together with municipal waste. When disposing of the old device, use local waste collection and separation systems.

3 of 4